RDV Specification Diagram

POWER OPTIONS

Option 1: Cord & Plug / Feelux Drivers

FLC (15,30 or 75) 24V/XL

Option 2: Hardware / Feelux Driver

XLD75-124V-FC

Option 3:

3rd Party Drivers
3rd party drivers are available to 600W.
Please consult factory.

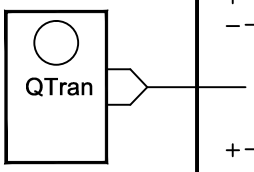

NOTE:
Options 2 & 3 require low voltage wire to be provided by EC.

CONNECTION OPTIONS

Non-Dimming Options

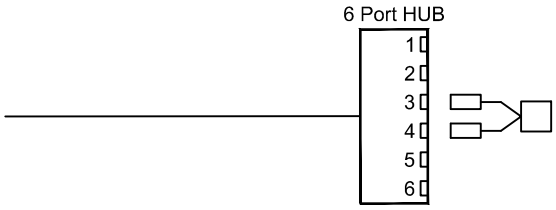

Dimming Options:

Inline Dimmer

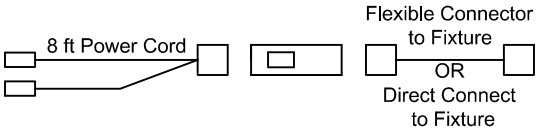

Dimming Interface DMX

Feelux RGB with require DMX Interface FDA-LSM

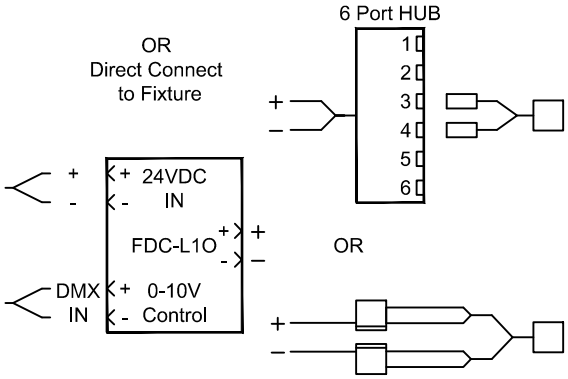

Note: 3rd party Dimming Drivers do not require FDC-L10

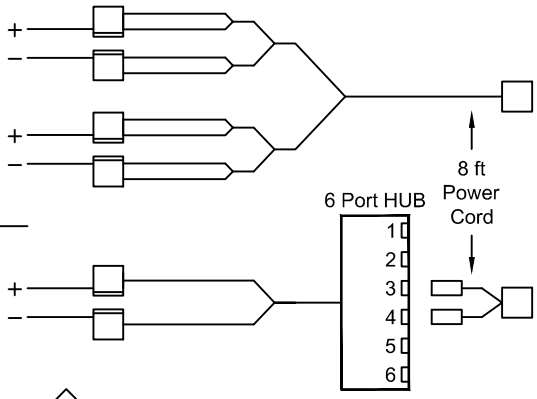

◇ = Splice point - Polarity must be followed

FIXTURE OPTIONS

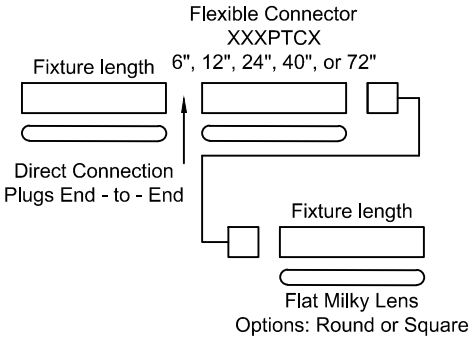

MAX Fixture Load on

Single Power Feed = 75W

Every 12' (75W) requires Side Feed Unit

TOTAL CONNECTED LOAD SHOULD NOT EXCEED DRIVER WATTS!