HDV Specification Diagram

POWER OPTIONS

Option 1: Cord & Plug / Feelux Drivers

FLC (15,30 or 75) 24V/XL

Option 2: Hardware / Feelux Driver

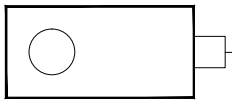

XLD75-124V-FC

Option 3:

3rd Party Drivers
3rd party drivers are available to 600W.
Please consult factory.

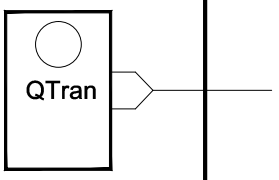

NOTE:
Options 2 & 3 require low voltage wire to be provided by EC.

CONNECTION OPTIONS

Non-Dimming Options:

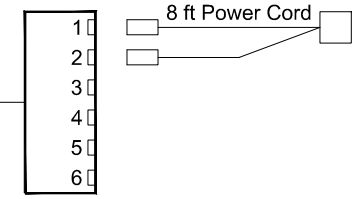

Dimming Options:

Inline Dimmer

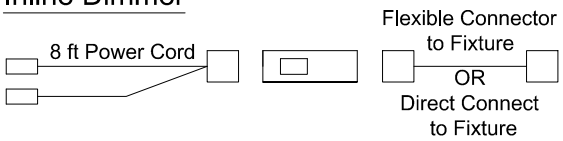

Dimming interface 0-10V

Feelux Drivers require Dimming Interface FDC-L10

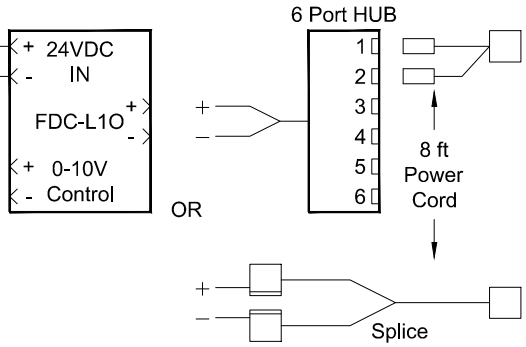

Note: 3rd party drivers do NOT require FDC-L10 for Dimming

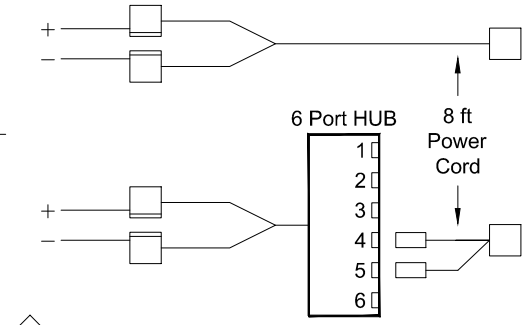

◇ = Splice point - Polarity must be followed

FIXTURE OPTIONS

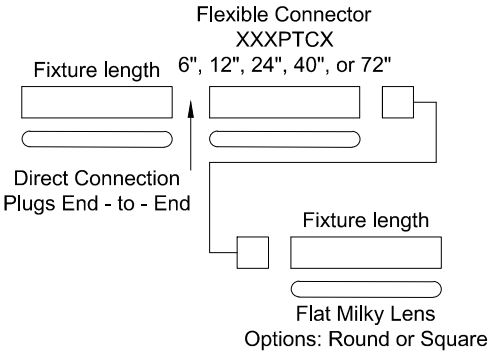

MAX Fixture Load on
Single Power Feed = 55W

Every 15' (55W) requires Side Feed Unit

TOTAL CONNECTED LOAD SHOULD NOT EXCEED DRIVER WATTS!