NDV Specification Diagram

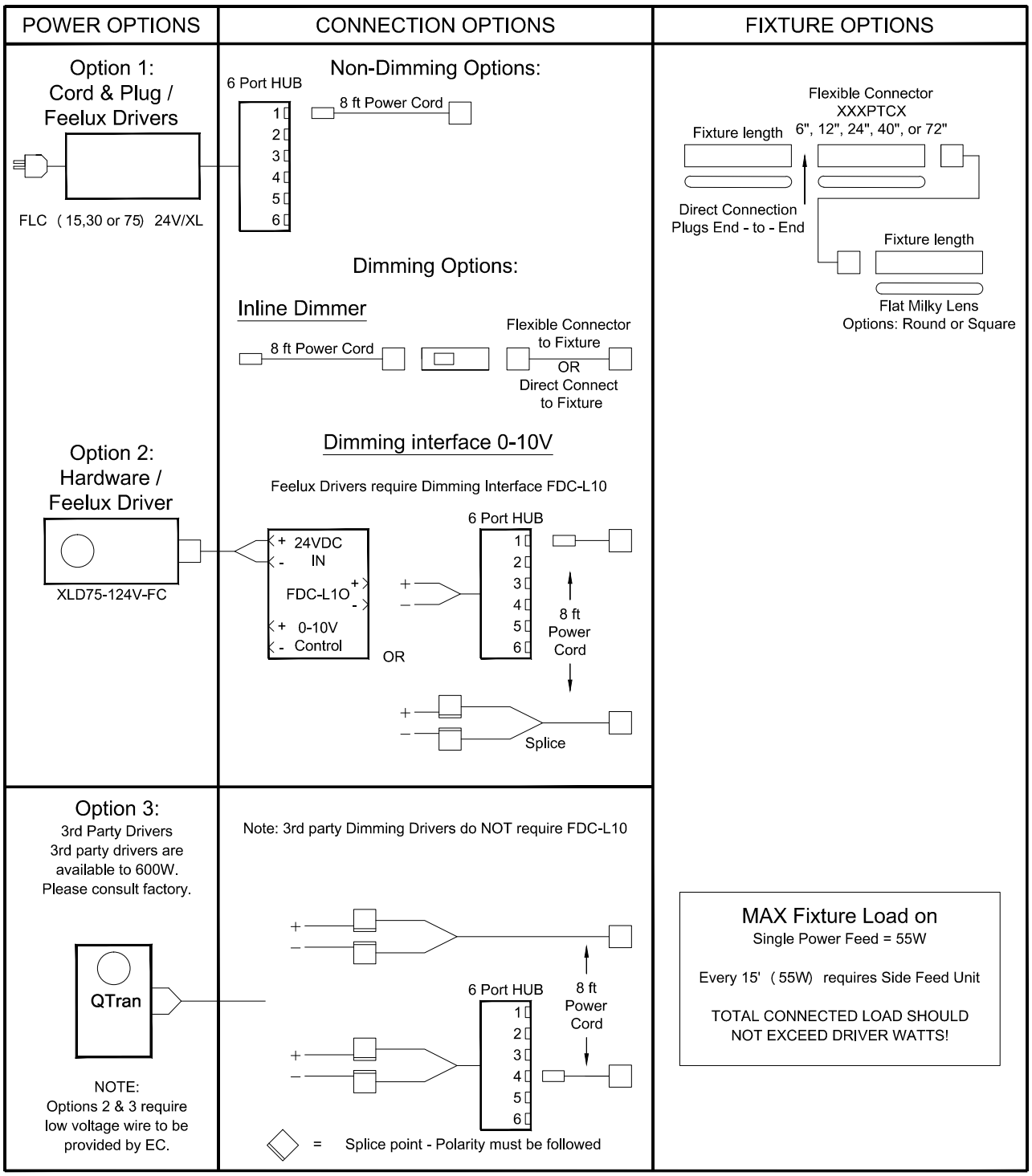

Sheet 1 of 1
1106-11-0007 REV –